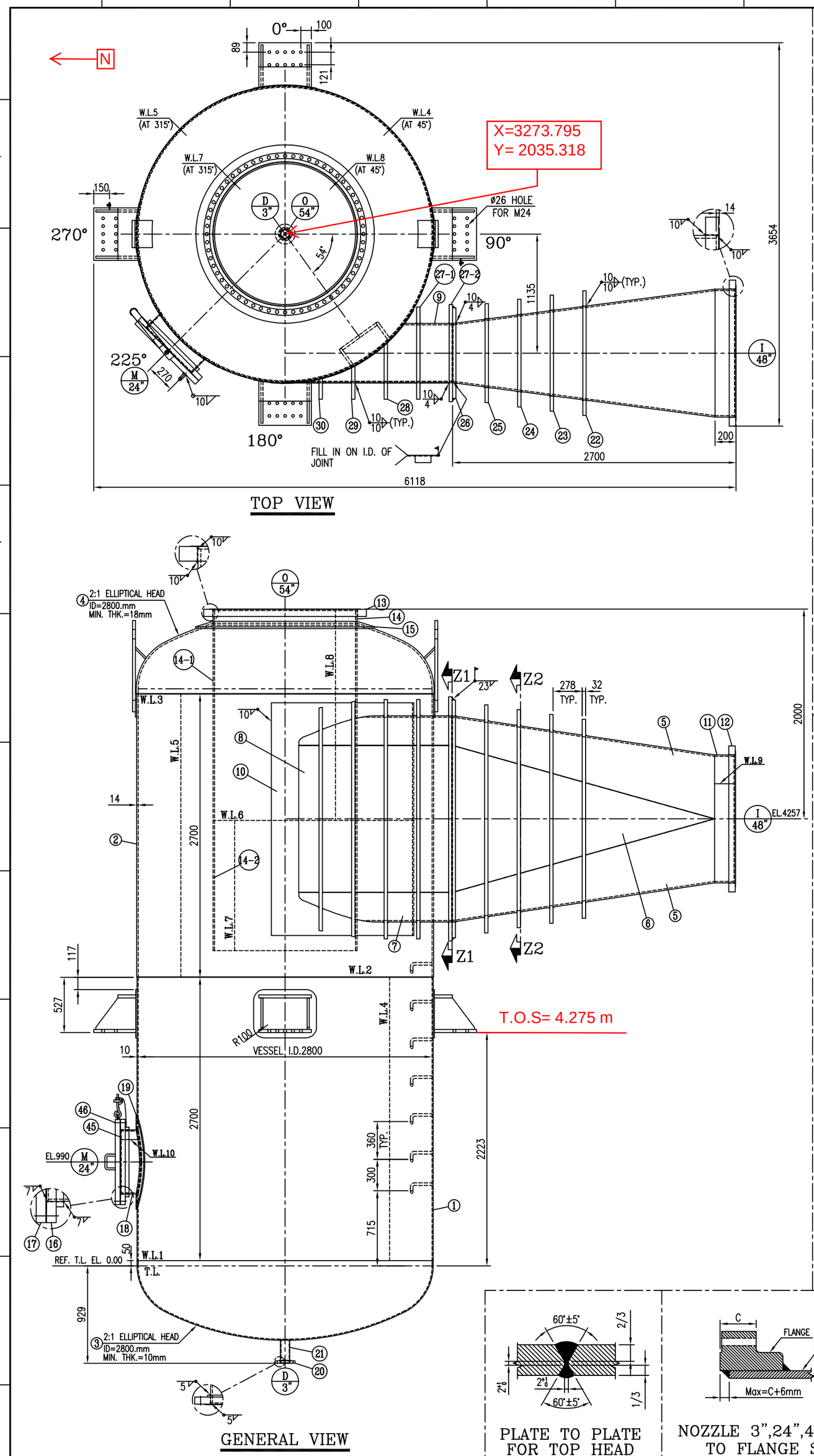

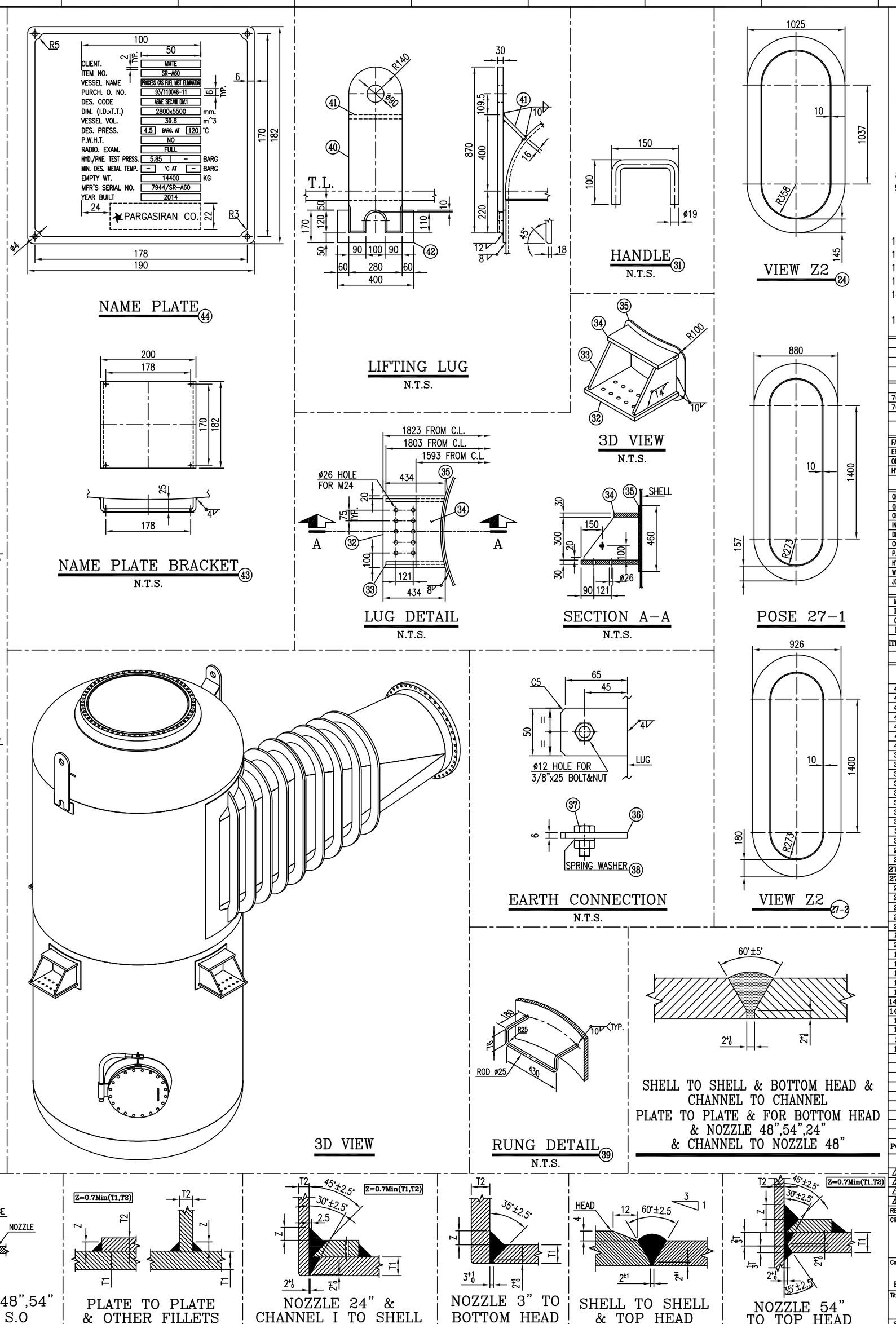

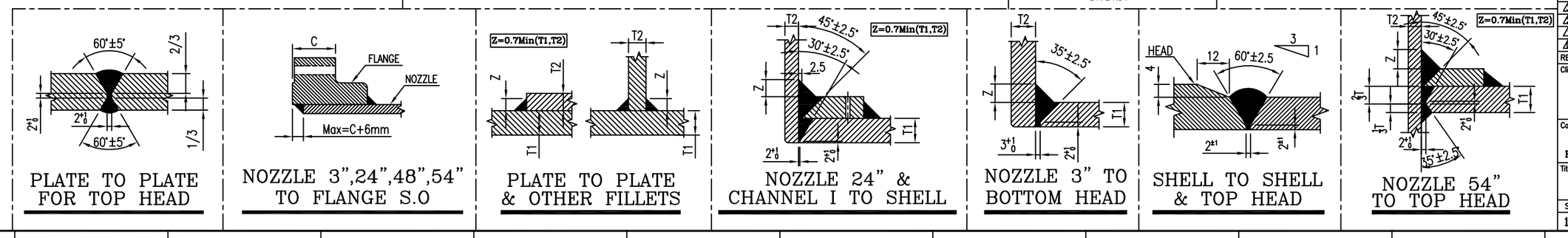

NOTE:

1 – ALL DIMENSIONS ARE IN MILLIMETER, UNLESS OTHERWISE NOTED.
2 – ALL FLANGES SHALL BE AS PER ASME B16.5/B16.47 SERIES B.
3 – FOR NOZZLES ON SHELL PROJECTIONS ARE FROM VESSEL C.L. AND FOR NOZZLES ON HEADS, PROJECTIONS ARE NEAREST TANGENT LINE.
4 – ALL BOLT HOLES SHALL BE STRADDLE THE MAIN AXIS OF THE VESSEL.
5 – GASKET MATERIAL: SPIRAL WOUND GASKET, GRAPHITE FILLER, 4.5 mmTHK., 304 S.S. WINDING, S.S., OUTER AND INNER RING AS PER ASME B 16.20.
6 – FLANGE FACING UP TO 24" TO BE IN ACCORDANCE WITH ASME B16.5 AND FOR UPPER THAN24" TO BE ACCORDANCE WITH ANSI B16.47 SERIES B. FLANGE FACING FINISH SHALL BE BETWEEN 125 & 250 AARH (Ra 3.2 t0 6.3)
7 – ALL EXTERNAL SURFACES WILL BE BLASTED ACC. TO SA 2 1/2.
8 – ALL EXTERNAL SURFACES WILL BE PAINTED AS PER PAINTING PROCEDURE.
9 – PRIOR TO THE FINAL INSPECTION OF VESSEL ALL SLAG, LOOSE, SCALE, DIRT, GIRT, WELD SPATTER, PAINT, OIL AND OTHER FOREIGN MATTER ARE TO BE THOROUGHLY REMOVED IN ORDER THAT INSPECTION CAN BE CONDUCTED TO THE BEST ADVANTAGE.
10 – ALL OPENINGS AND NOZZLES SHALL BE PROTECTED PRIOR TO SHIPMENT.
11 – ALL THICKNESS SPECIFIED ON DWG. ARE MINIMUM AFTER FORMING.
12 – ALL WELDING SEAMS INSIDE SHELL & FLANGE TO BE GROUNDED SMOOTH.
13 – WELDING SYMBOLS ARE ACCORDING TO AWS.
14 – UNLESS INTERNAL PROJECTIONS ARE SPECIFIED, NOZZLES ARE TO BE CUT OFF FLUSH WITH THE INSIDE OF SHELL OR HEAD AND INSIDE SHARP EDGE SHALL BE
15 – INTERCONNECTION FLANGE FOR INLET AND OUTLET IS CONSIDERED.

O (54")	47	36	6	146	14	12	
I (48")	42	5	32	128	126	10	
NOZZLE	P(KN)	V_C (KN)	V_L (KN)	M_C(KN-M)	M_L(KN-M)	M_T(KN-M)	

MAXIMUM ALLOWABLE NOZZLE LOADS

DRAWING OR DOCUMENT NO.	DESCRIPTION
7675-SR-A60-DAV-GEA-01-A	DAVIT ARM DRAWING
7675-SR-A60-WMP-GEA-01-A	RT AND NDT MAP

REFERENCE DRAWINGS

FABRICATED WEIGHT :	14400 Kg	WIND SHEAR :	2383 Kgf
ERECTED WEIGHT :	1400Kg	WIND MOMENT :	1775.3 Kgf.m
OPERATING WEIGHT :	10324 Kg	EARTHQUAKE SHEAR :	2949 Kgf
HYDROSTATIC WEIGHT :	47962 Kg	EARTHQUAKE MOMENT :	2197 Kgf.m

LOADS AT BASE

OPERATING PRESSURE :	2.044-2.433 barg	DESIGN CODE :	ASME SEC.VIII DIV.1
OPERATING FLOWRATE :	1.2*120,341Kf/HR	NORMAL FLOWRATE	1.2*131,799 Nm³/HR
OPERATING TEMPERATURE :	80.6-90 °C	SERVICE :	CONTINUOUS
INTERNAL DESIGN PRESSURE :	4.5 barg	FLUID :	NATURAL GAS
DESIGN TEMPERATURE :	120 °C	EARTHQUAKE / SOIL TYPE / I :	ZONE 4 / Sc / 1.25
CORROSION ALLOWANCE :	3 mm	R.T. (LONGITUDINAL / CIRCUMFERENTIAL) :	FULL / FULL
P.W.H.T. :	NO	INSULATION :	NO
HYDROTEST PRESSURE :	5.85 barg	FIREPROOFING :	NO
WIND (Km/hr)/EXPOSURE/M :	160 / C / 1.15	LADDER & PLATFORM :	NO
JOINT EFFICIENCY (LONG./CIRCUM.) (SHELL/HEAD):	1/1	GAS DENSITY :	2.008 Kg/m³

DESIGN DATA

ITEM	SIZE	SERVICE	QTY.	MATERIAL	NOZZLE PROJ.	NOZZLE Sch/Thk.	FLANGE ORIENT.	FLANGE CLASS	FLANGE TYPE	FLANGE FACE	RBIMP PAD OD.	RBIMP PAD THK.	REMARKS
M	24"	MANHOLE	1	A105	1570	10mm	225°	150#	S.O.	R.F.	900	10	C/W BLIND
D	3"	DRAIN	1	A105	929	160	SEE DWG	150#	W.N.	R.F.	-	-	-
O	54"	OUTLET	1	A105	760	14mm	SEE DWG	150#	S.O.	R.F.	1700	18	-
I	48"	INLET	1	A105	SEE DWG	14mm	SEE DWG	150#	S.O.	R.F.	1700	14	-

LIST OF CONNECTIONS

TOTAL WEIGHT (Kg): 14400

POS.	DESCRIPTION	MATERIAL	QTY	UNIT WEIGHT	TOTAL WEIGHT	REMARKS
46	STUD BOLT & 2 NUTS 1 1/4", L=180mm	A 193 B7/A 194 2H	20	1.6	32	
45	GASKET 24",150#	SPIRAL WOUND	1	-	-	SEE NOTE 5
44	NAME PLATE PL.190x182x1t	S.S.	1	0.5	0.5	
43	NAME PLATE BRACKET PL.240x182x6t	A516 Gr.70	1	2.8	2.8	
42	REINFORCING PAD LIFTING LUG PL.360x170x12t	A516 Gr.70	2	5.7	11.4	
41	SUPPORT PL.260x155.8x16t	A516 Gr.70	2	5	10	
40	LIFTING LUG PL.870x260x30t	A516 Gr.70	2	49.7	99.4	
39	INTERNAL RUNG ROD #25,L=878	C.S.	7	3.5	24.5	
38	SPRING WASHER 3/8"	C.S.	2	-	-	GALVANAZED
37	HEX. BOLT & NUT 3/8",L=25mm	C.S.	2	0.1	0.2	GALVANAZED
36	EARTHING PL.70X50X6t	C.S.	2	0.2	0.4	GALVANAZED
35	REINFORCING PAD LUG PL.600X460X12t	A516 Gr.70	4	26	104	
34	SUPPORT PL.500X193.2X30t	A516 Gr.70	4	22.7	90.8	
33	SUPPORT PL.300X399.7X20t	A516 Gr.70	8	14.2	113.6	
32	SUPPORT PL.500X423.2X30t	A516 Gr.70	4	50	200	
31	HANDLE R.8,#19 L=295	C.S.	1	0.4	0.4	
30	STIFFENING RING PL.2126.6x191.8x32t	A516 Gr.70	1	78.2	78.2	
29	STIFFENING RING PL.2241.2x311.3x32t	A516 Gr.70	1	89.3	89.3	
28	STIFFENING RING PL.2280x531.6x32t	A516 Gr.70	1	106	106	
27-2	STIFFENING RING PL.2280x926x32t	A516 Gr.70	1	232	232	
27-1	STIFFENING RING PL.2280x880x32t	A516 Gr.70	1	200	200	
26	STIFFENING RING PL.2247.9x863x32t	A516 Gr.70	1	183	183	
25	STIFFENING RING PL.2155.1x944.2x32t	A516 Gr.70	1	179.7	179.7	
24	STIFFENING RING PL.2062.4x1025.4x32t	A516 Gr.70	1	176.2	176.2	
23	STIFFENING RING PL.1969.5x1106.5x32t	A516 Gr.70	1	172.9	172.9	
22	STIFFENING RING PL.1876.8x1187.7x32t	A516 Gr.70	1	169.5	169.5	
21	NOZZLE NECK "D" PIPE 3",SCH.160,L=225	A106 Gr.B	1	3.4	3.4	
20	FLANGE "D" 3",150#,S.O.,R.F.	A105	1	4	4	
19	REINFORCING PAD "M" PL.#900x10t	A516 Gr.70	1	50	50	
18	NOZZLE NECK "M" PL.1885x194x10t	A516 Gr.70	1	27	27	
17	BLIND "M" 24",150#,R.F.	A105	1	148	148	
16	NOZZLE "M" 24",150#,S.O.,R.F.	A105	1	95	95	
15	REINFORCING PAD "O" PL.#1700x18t	A516 Gr.70	1	320.7	320.7	
14-2	NOZZLE NECK "O" PL.1241x4265x14t	A516 Gr.70	1	581.7	581.7	
14-1	NOZZLE NECK "O" PL.2000x4265x14t	A516 Gr.70	1	937.5	937.5	
13	FLANGE "O" 54",150#,S.O.,R.F.	A105	1	191	191	
12	FLANGE "I" 48",150#,S.O.,R.F.	A105	1	152.5	152.5	
11	NOZZLE NECK "I" PL.3786.2x186x14t	A516 Gr.70	1	77.4	77.4	
10	REINFORCING PAD "I" PL.2218x1597x14t	A516 Gr.70	1	389	389	
9	CHANNEL "I" PL.1400x490x14t	A516 Gr.70	1	75.4	75.4	
8	CHANNEL "I" PL.1590x1400x14t	A516 Gr.70	1	244.5	244.5	
7	CHANNEL "I" PL.1590x867x14t	A516 Gr.70	2	151.5	303	
6	TRANSITION PLATE "I" PL.2518x1400x14t	A516 Gr.70	2	387.5	775	
5	TRANSITION PLATE "I" PL.2762.5x1776.5x14t	A516 Gr.70	2	539	1078	
4	TOP HEAD ELLIP.2:1,I.D.=2800,THK.18,S.F.50	A516 Gr.70	1	1400	1400	
3	BOTTOM HEAD ELLIP.2:1,I.D.=2800,THK.10,S.F.50	A516 Gr.70	1	775	775	
2	SHELL PLATE PL.8840.5x2700x14t	A516 Gr.70	1	1623	2623	
1	SHELL PLATE PL.8827.9x2700x10t	A516 Gr.70	1	1872	1872	

PARTS LIST

REV.	DATE	DESCRIPTION	DRAW	DESIGN	CHECK 1	CHECK 2	APPROVE
3	94/05/11	ISSUE FOR APPROVAL	M.Solgi	M.Ghasemzadeh	F.Karami	M.Ghasemzadeh	G.R.ANSARI
2	94/01/09	ISSUE FOR APPROVAL	M.Solgi	M.Ghasemzadeh	F.Karami	M.Ghasemzadeh	G.R.ANSARI
1	93/10/06	ISSUE FOR APPROVAL	M.Solgi	M.Ghasemzadeh	F.Karami	M.Ghasemzadeh	G.R.ANSARI

Client : شرکت توسعه آبی و فولاد گاز گهر G.I.S.D.Co.

Contract No. : 93/110046-11

CAD File Name : 7944-SR-A60-GEN-GEA-01-C

Contractor : MINES & METAL TECHNOLOGICAL ENGINEERING CO. MMTE

Consultant :

Manufacture : PARGASIRAN CO.

Title : GENERAL ARRANGEMENT & DETAIL DRAWING FOR PROCESS GAS FUEL MIST ELIMINATOR(SR-A60)

Plant : KOWSAR GISD MEGA MODULE PROJECT

Scale	Size	QTY	Manufacturer Drawing No.:	7944-SR-A60-GEN-GEA-01-C	Sheet No.	Rev.
1:35	A2	1	Document No.:	7944-SR-A60-GEN-GEA-01-C	1	02